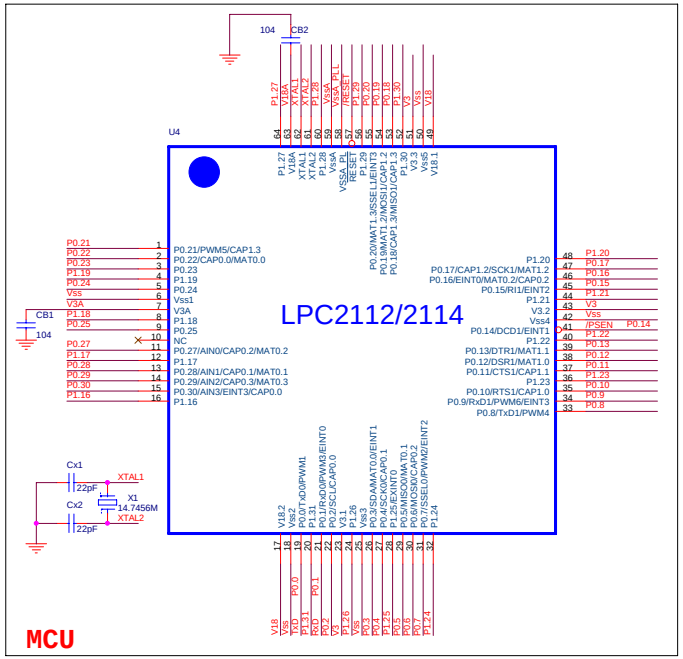

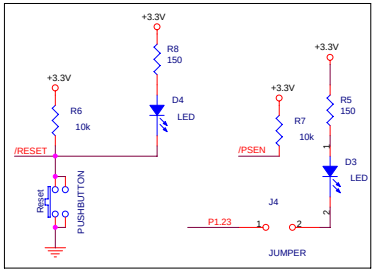

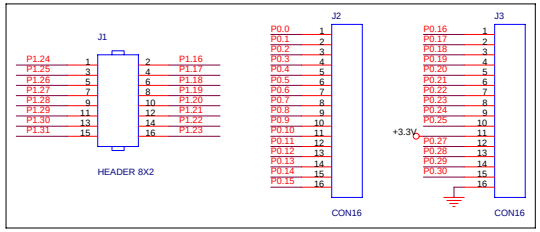

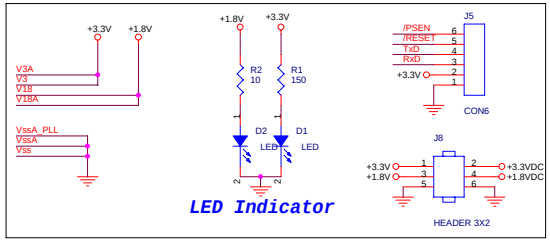

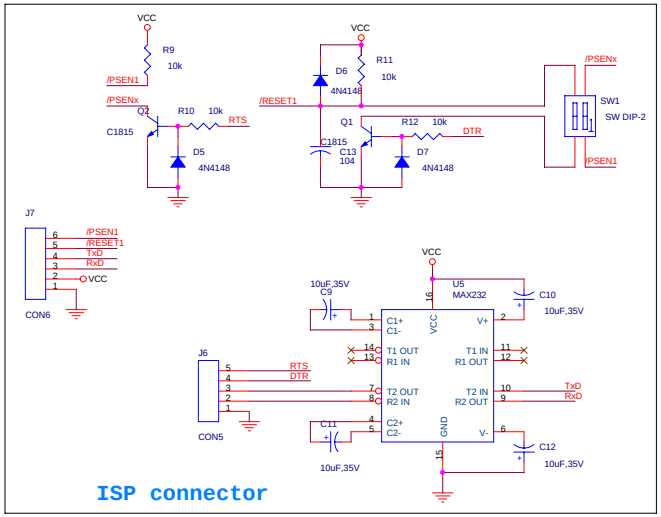

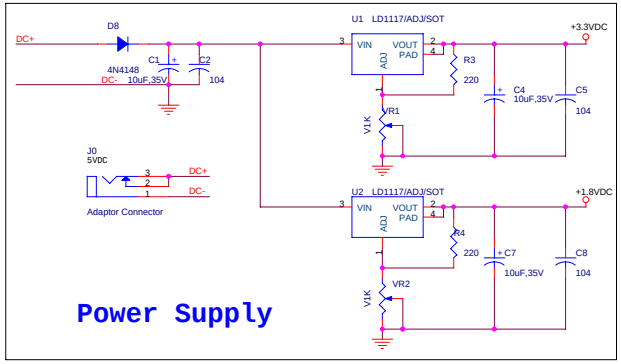

Title	KHVT-H2100	
Size C	Document Number 1	Rev 1.2
Date: Saturday, November 11, 2006	Sheet 1 of 1	